Eclipse 9400

Permanent Automatic Flushing Station - All Climate

Why Automatic Flushing?

- Keep your dead end water fresh and safe for consumption
- Save time and labor by eliminating the need for manual flushing
- Save water by flushing at lower volumes than hydrants
- Flush at night when demand is low



Product Details:

- Permanent 2” Automatic Flushing Station (1” also available)
- Housed in UV-resistent enclosure
- Discharges to surface - ideal for more remote areas
- Adjustable flow rates from roughly 40-200 GPM (site/pressure dependent)
- Digital programmable controller (standard) or bluetooth controller (optional)
- Program up to 12 flush cycles per day and up to 6 hours per flush
- Fully serviceable from above ground

KUPFERLE
WATER SOLUTIONS
Quality • Conservation • Innovation
Since 1857

Kupferle | 800-231-3990 | hydrants.com



Digital Controller



Bluetooth Controller

Adjustable Flow Control

Stainless Steel Sampling Bibb

Diffusion/Splash Plate

Spring-Loaded Drain

2" Solenoid Operated Valve

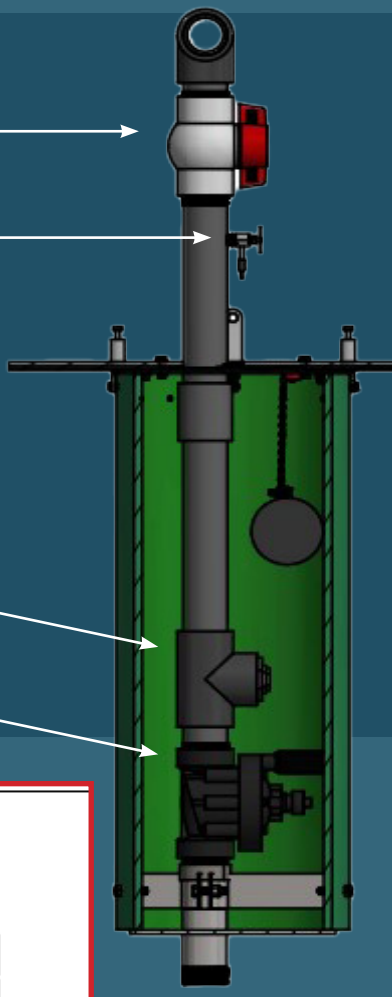

#9400 AUTOMATIC FLUSHING STATION SPEC SHEET

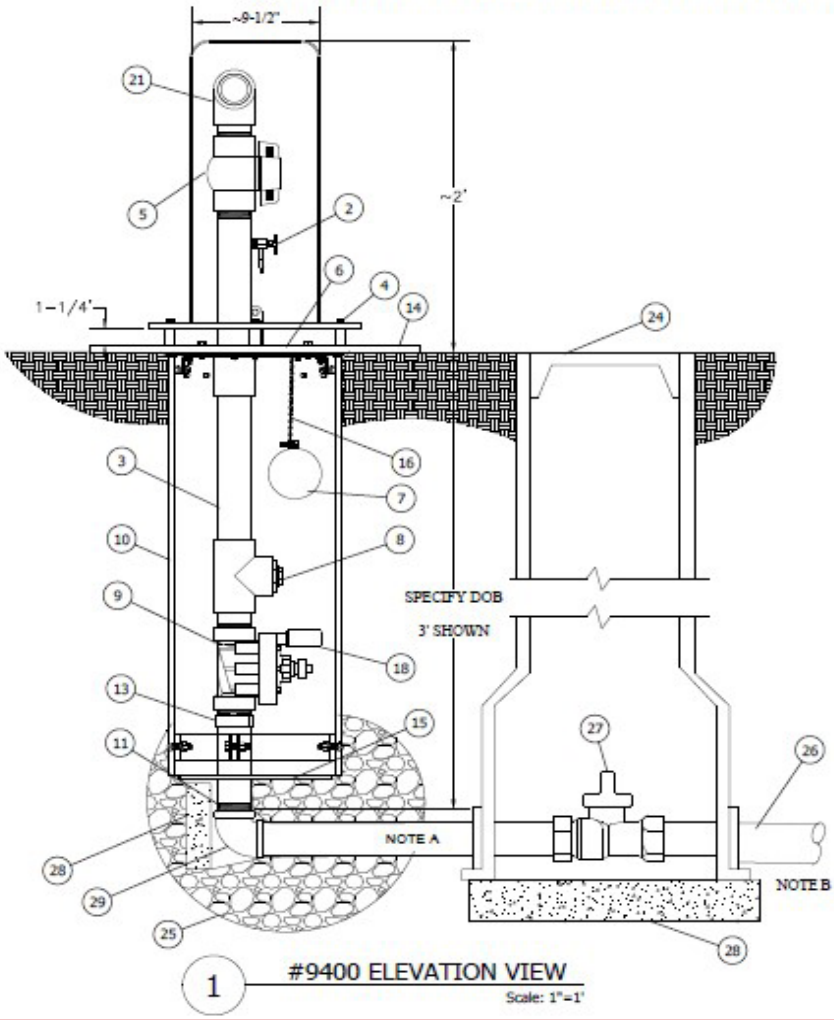

1 #9400 ELEVATION VIEW
Scale: 1"=1'

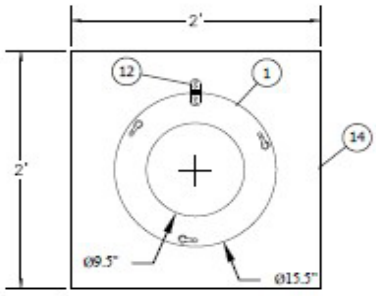

2 PLAN VIEW
Scale: 1"=1'

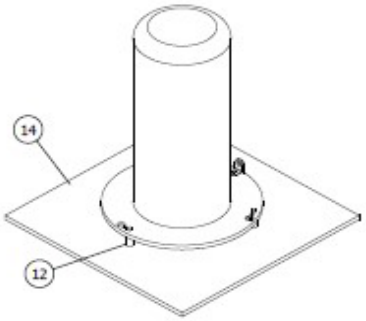

3 ABOVE GROUND VIEW
Scale: 1"=1'

Kupferle | Saint Louis, Missouri
hydrants.com

KUPFERLE
WATER SOLUTIONS
Quality · Conservation · Innovation
Since 1857